Omron

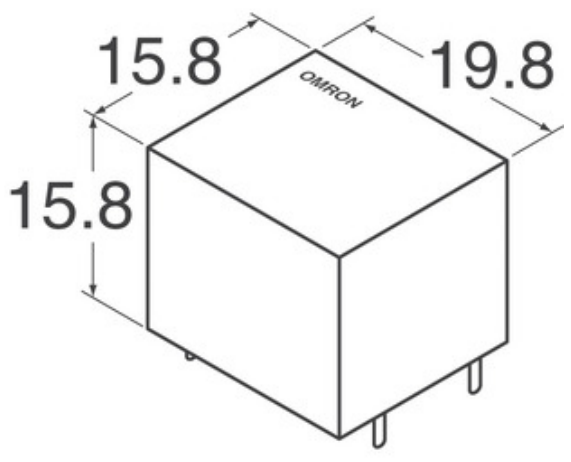

Ko te whakaahua he tohu. Tirohia nga korero mo nga taipitopito hua.

G5LA-1 DC9

Tau Wae:	G5LA-1 DC9
Kaihanga / Waitohu:	Omron
Whakaahuatanga hua	RELAY GENERAL PURPOSE SPDT 5A 9V
Ngā Rauemi:	G5LA-1 DC9.pdf
RoHs Tūnga	Whakahaerehia te kore utu / RoHS
Waehere Stock	2739 pcs stock
Tuhinga mai i	Hong Kong
Te Ara Tuhi	DHL/Fedex/TNT/UPS/EMS

TONO MO TE WHAKAHUA

Ngā whakaaturanga o G5LA-1 DC9

TAU WAE	G5LA-1 DC9
KAIHANGA	Omron
WHAKAAHUATANGA	RELAY GENERAL PURPOSE SPDT 5A 9V
WHAKAHAERE TOKO WHAKAHAERE / ROHS TŪNGA	Whakahaerehia te kore utu / RoHS
HE RAHINGA KEI TE WĀTEA	2739 pcs
PEPA RARAUNGA	G5LA-1 DC9.pdf
TAHURI I TE NGAOHIHI (MAX)	6.75 VDC
WHAKAKOREHIA TE NGAOHIHI (MIN)	0.9 VDC
KĀHUA WHAKAMUTUNGA	PC Pin
WHAKAOHO WHAKAWHITI	250VAC, 24VDC - Max
RAUPAPA	G5LA
WĀ WHAKAORA	5ms
MOMO TAE	General Purpose
PACKAGING	Tray
ĒTAHI INGOA	G5LA-1DC9 G5LA19DC G5LA1DC9 G5LA6010H
TAE MAHI	-40°C ~ 85°C
WHAKAMAHIA TE WA	10ms
MOMO TAE	Through Hole
WHAKAHAERE TOKO WHAKAHAERE / ROHS TŪNGA	Lead free / RoHS Compliant
NGA AHUATANGA	Insulation - Class A, Sealed - Flux Protection
WHAKAAHUATANGA TAIPITOPITO	General Purpose Relay SPDT (1 Form C) 9VDC Coil Through Hole
WHAKAAETANGA WHAKATAURANGA (ANEI)	5A
WHAKAAETANGA MEA	Silver Tin Oxide (AgSnO)
PUKA PUKA WHAKAPĀ	SPDT (1 Form C)
KOHIKOHI NGAOHIKO	9VDC
MOMO MOMO	Non Latching
KO TE WHAKAAETANGA MIIHINI	225 Ohms
KOHIKOHI MIIHINI	360 mW
KOHIKOHI KEI TE AUKATI	40.0mA

Ngā tūtohu e hāngai ana

Omron G5LA-1 DC9	G5LA-1 DC9 Kaiwhiwhi	G5LA-1 DC9 Kaiwhakarato
G5LA-1 DC9 Utu	G5LA-1 DC9 Pikitia	G5LA-1 DC9 Whakaahua
G5LA-1 DC9 PDF Datasheet	G5LA-1 DC9 Download Datasheet	Tuhinga G5LA-1 DC9
G5LA-1 DC9 Stock	Hokona G5LA-1 DC9	Hokona Omron G5LA-1 DC9
Omron G5LA-1 DC9	Omron Kaiwhakarato	Omron Kaiwhiwhi
Omron G5LA-1 DC9	Omron Electronics Inc-IA Div G5LA-1 DC9	Omron Electronics Inc-EMC Div G5LA-1 DC9
Omron Electronics LLC G5LA-1 DC9		

Ngā Hua e hāngai ana

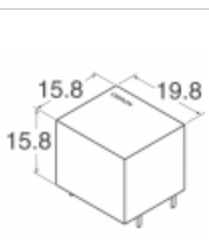

G5LA-1-E DC12
Kaihanga: Omron
Whakaahuatanga: RELAY GEN PURPOSE SPDT 5A 12V
I roto i te taonga: 3958 pcs
RFQ

G5LA-1-CF DC48
Kaihanga: Omron
Whakaahuatanga: RELAY GEN PURPOSE SPDT 5A 48V
I roto i te taonga: 4982 pcs
RFQ

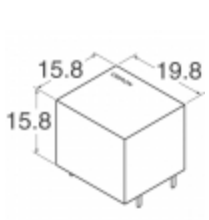

G5LA-1-CF DC9
Kaihanga: Omron
Whakaahuatanga: RELAY GENERAL PURPOSE SPDT 5A 9V
I roto i te taonga: 6161 pcs
RFQ

G5LA-1 DC48
Kaihanga: Omron
Whakaahuatanga: RELAY GEN PURPOSE SPDT 5A 48V
I roto i te taonga: 3155 pcs
RFQ

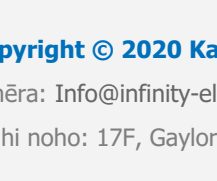

G5LA-1-CF DC5
Kaihanga: Omron
Whakaahuatanga: RELAY GENERAL PURPOSE SPDT 5A 5V
I roto i te taonga: 3688 pcs
RFQ

G5LA-1-CF DC24
Kaihanga: Omron
Whakaahuatanga: RELAY GEN PURPOSE SPDT 5A 24V
I roto i te taonga: 5045 pcs
RFQ

G5LA-1 DC24
Kaihanga: Omron
Whakaahuatanga: RELAY GEN PURPOSE SPDT 5A 24V
I roto i te taonga: 3810 pcs
RFQ

G5LA-1-E DC48
Kaihanga: Omron
Whakaahuatanga: RELAY GEN PURPOSE SPDT 5A 48V
I roto i te taonga: 4809 pcs
RFQ

G5LA-1 DC5
Kaihanga: Omron
Whakaahuatanga: RELAY GENERAL PURPOSE SPDT 5A 5V
I roto i te taonga: 7012 pcs
RFQ

G5LA-1 DC12
Kaihanga: Omron
Whakaahuatanga: RELAY GEN PURPOSE SPDT 5A 12V
I roto i te taonga: 5668 pcs
RFQ

G5LA-1-CF DC12
Kaihanga: Omron
Whakaahuatanga: RELAY GEN PURPOSE SPDT 5A 12V
I roto i te taonga: 6154 pcs
RFQ

G5LA-1-E DC24
Kaihanga: Omron
Whakaahuatanga: RELAY GEN PURPOSE SPDT 5A 24V
I roto i te taonga: 5853 pcs
RFQ

Copyright © 2020 Kaitoha Kaitoha o nga waahanga hiko
Ī-mēra: Info@infinity-electronic.com
Wāhi noho: 17F, Gaylord Hangarau Hokohoko, 114-118 Lockhart Road, Wan Chai, Hong Kong